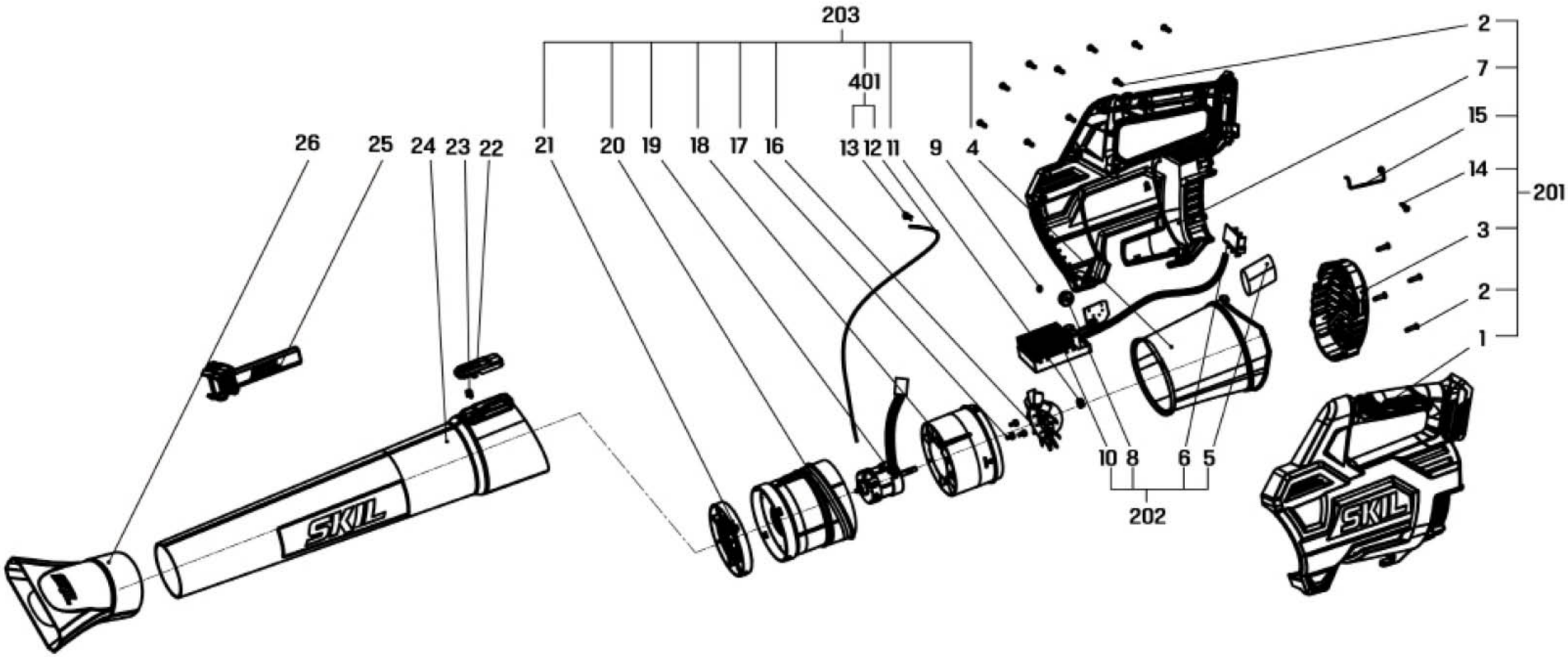
203
401
26
25
24
23
22
21
20
19
18
17
16
13
12
11
9
4
2
7
15
14
3
2
1
201
10
8
6
5
202
SKIL
SKIL

부품도면 및 부품 코드 안내

구분	부품 번호	부품명
1		Left Case
2	8000002036	Screw
3	8000002037	After The Wind Hood
4	8000002038	Collector Shoe Gear
5	8000002039	Wire Buckle Inductance
6	8000002040	Plug In Socket
7		Right Case
8	8000002042	Speed Regulator
9	8000002043	Oil Pipe Joint Seal
10	8000002044	Controller Assembly
11	8000002045	Nut
12		Internal Wire
13		Lug
14	8000002048	Screw
15	8000002049	Anti Static Wire
16	8000002050	Fan
17	8000002051	Screw
18	8000002052	Motor Base
19	8000002053	Brushless Motor
20	8000002054	Diffuser
21	8000002055	Outlet Cover
22	8000002056	Blast Pipe Lock
23	8000002057	Spring
24	8000002058	Pipe
25	8000002059	Two Hole Hanger
26		flat head
201	8000002060	Chassis Components
202	8000002061	Electronic Components
203	8000002062	Ram Components
401	8000002063	Lug Component