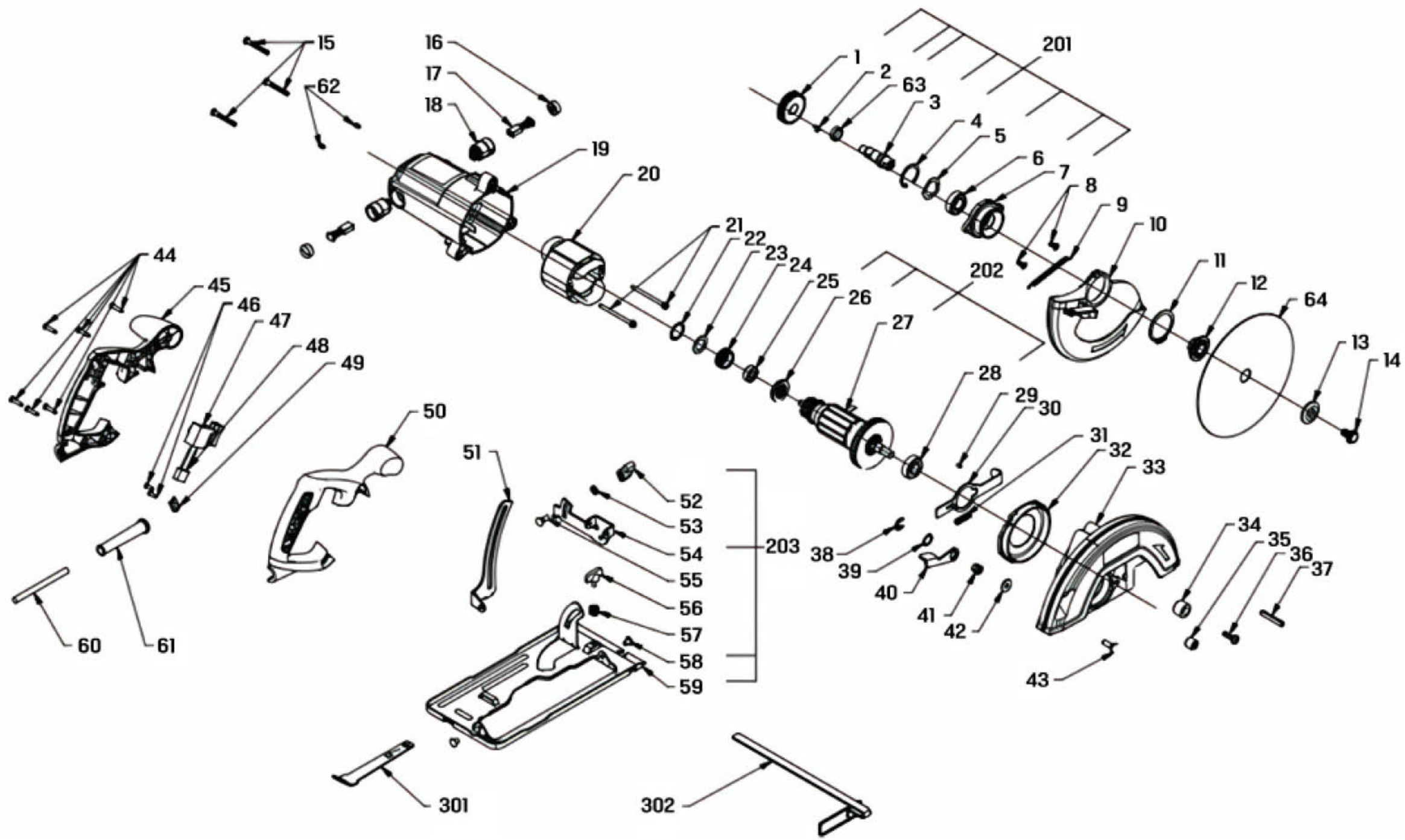
15
62
16
17
18
19
20
21
22
23
24
25
26
27
28
29
30
31
32
33
34
35
36
37
38
39
40
41
42
43
44
45
46
47
48
49
50
51
52
53
54
55
56
57
58
59
60
61
63
64
1
2
3
4
5
6
7
8
9
10
11
12
13
14
201
202
203
301
302

부품도면 및 부품 코드 안내

SKIL®

구분	부품 번호	부품명
1	3570243001	Gear
2	5680002001	Plain Key
3	3553895001	Output Shaft
4	5660022002	Circlips For Hole
5	3700258002	Wave Washer
6	5700018003	Ball Bearing
7	3420193004	Gear Case Cover
8	5610086004	Thread Forming Screw
9	3660527002	Tension Spring
10	3128313001	Lower Guard
11	5660026001	Circlips For Shaft
12	3580530001	Inner Flange
13	3580341001	Outer Flange
14	5620398001	Flange Bolt
15	5610062005	Thread Forming Screw
16	3127175001	Brush Cover
17	4960019005	Carbon Brush Assy
18	2800198001	Brush Holder
19	3128316003	Motor Housing
20	2740391001	Stator
21	5610227001	Screw With Washer
22	3121054001	Spring
23	3700255001	Washer
24	3322062001	Bearing Holder
25	5700008012	Ball Bearing
26	3127174001	Insulated Pad
27	2751059001	Rotor
28	5700300001	Ball Bearing
29	3121038002	Rubber Stick
30	3706025001	Spindle Lock
31	3660076001	Spring
32	3128312001	Fan Baffle
33	3421793002	Gear Case

구분	부품 번호	부품명
34	3124384001	Stopper
35	5700033002	Needle Bearing
36	5610073001	Thread Forming Screw
37	5670008002	Spring Pin
38	5660010003	E Ring
39	3700283003	Wave Washer
40	3700242004	Lever
41	5630043001	Nut
42	5650017006	Plain Washer
43	5620153001	Screw
44	5610042014	Tapping Screw
45	3128315003	Left Handle
46	5610093004	Tapping Screw
47	4870478013	Trigger Switch
48		Capacitor
49	3700285001	Cord Anchorage
50	3128314003	Right Handle
51	3705961001	Depth Bracket
52	3400010036	Wing Nut
53	5650016005	Plain Washer
54	3700839001	Support
55	5640019003	Square Neck Bolt
56	3400011045	Wing Bolt
57	3660036002	Spring
58	5680009001	Rivet
59	3700287005	Base Plate
60	4810002282	Power Cord & Plug
61	3121050002	Cord Guard
62	5620016002	Hexagon Socket Screw
63	3580345001	Shaft Sleeve
64		Blade
201	2824322001	Gear Set
202	2824464001	Rotor Set

구분	부품 번호	부품명
203	2824405001	Base Plate Set
301	3700664001	Wrench
302	3700581003	Rip Fence