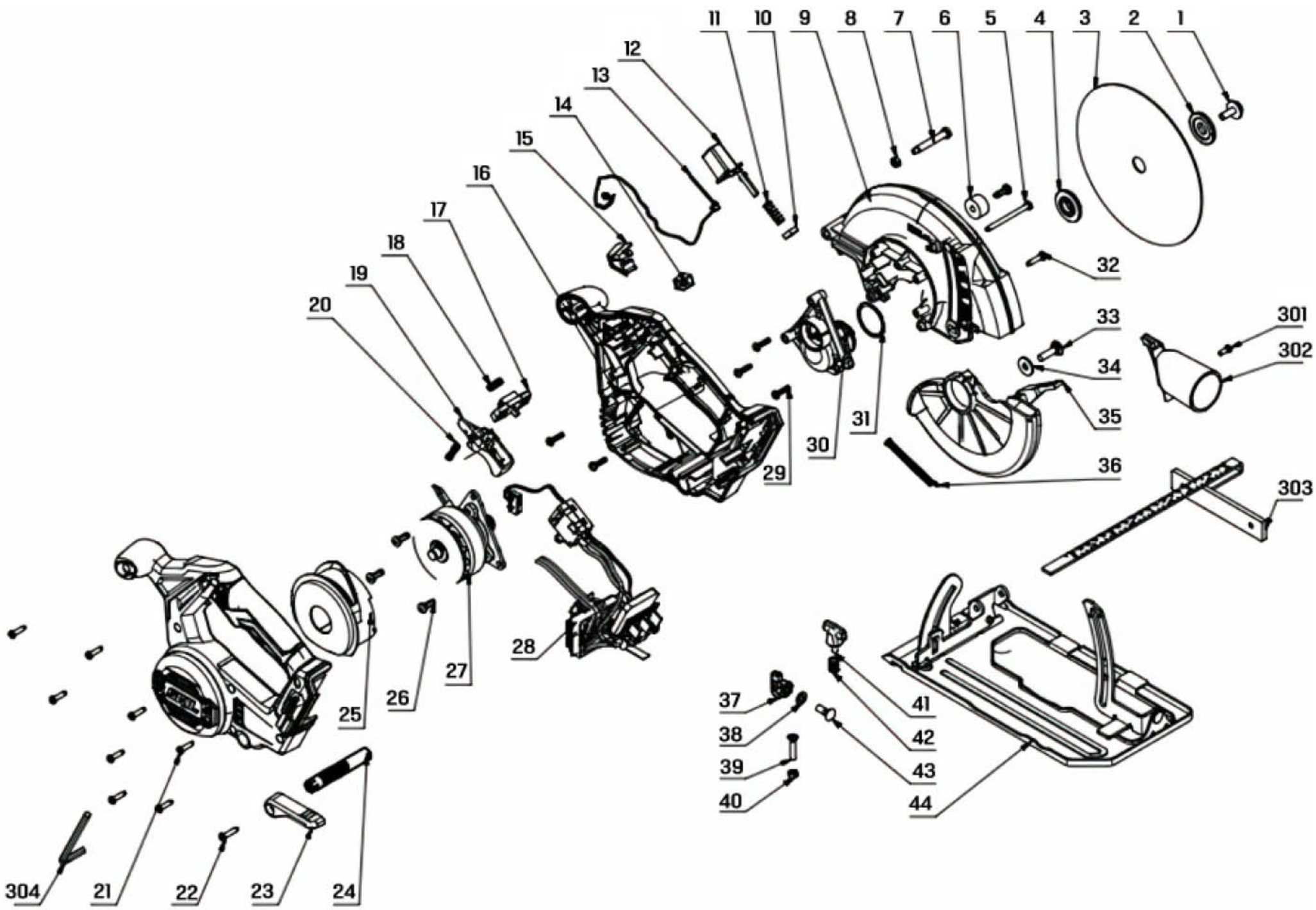
1
2
3
4
5
6
7
8
9
10
11
12
13
14
15
16
17
18
19
20
21
22
23
24
25
26
27
28
29
30
31
32
33
34
35
36
37
38
39
40
41
42
43
44
301
302
303
304

부품도면 및 부품 코드 안내

구분	부품 번호	부품명
1	5610290004	Tapping Screw
2	3128231001	Right Fan Baffle
3	5610057005	Thread Forming Screw
4	2826083002	Motor & Gear ASSY
5	3660028003	Stop Spring
6	3129888002	Switch Trigger
7	3128727001	Lock Off Button
8	3660045001	Spring
9	3900169001	L,R Housing Set
10	5610094004	Thread Forming Screw
11	2824353004	Gear Case ASSY
12	2824528003	LED Wire Assembly
13	3127485001	LED Cover
14	3130075001	LED Holder
15	5630007004	Prevailing Torque Hexagon Nut
16	3402768001	Spindle Lock Button
17	3660326001	Spring
18	3704010001	Felt Block
19	3422598001	Upper Guard
20	5640198001	Bolt
21	3121051002	Stopper
22	5620455001	Tapping Screw
23	3552628001	Inner Flange
24		Blade
25	3550938001	Out Flange
26	5620563001	Flange Bolt
27	5620157003	Hexagon Socket Screw
28	5640044004	Bolt
29	5650053001	Washer
30	5660226001	Circlip For Shaft
31	3130061001	Lower Guard
32	3660371002	Spring
33	2826832001	Base Plate Set

구분	부품 번호	부품명
34	3660071003	Spring
35	5640204002	Wing Bolt
36	5640019003	Square Neck Bolt
37	5630003011	Hexagon Nut
38	5620076003	Screw
39	5650016007	Plain Washer
40	5630258002	Wing Nut
41	2830515001	Electric Assembly
42	3402776001	Lock Rod
43	3128190001	Depth Adjusting Lever
44	5610042015	Tapping Screw
301	5620422001	Screw
302	3130570001	Vacuum Adapter
303		Guide Bar
304	5680028002	Hexagon Wrench