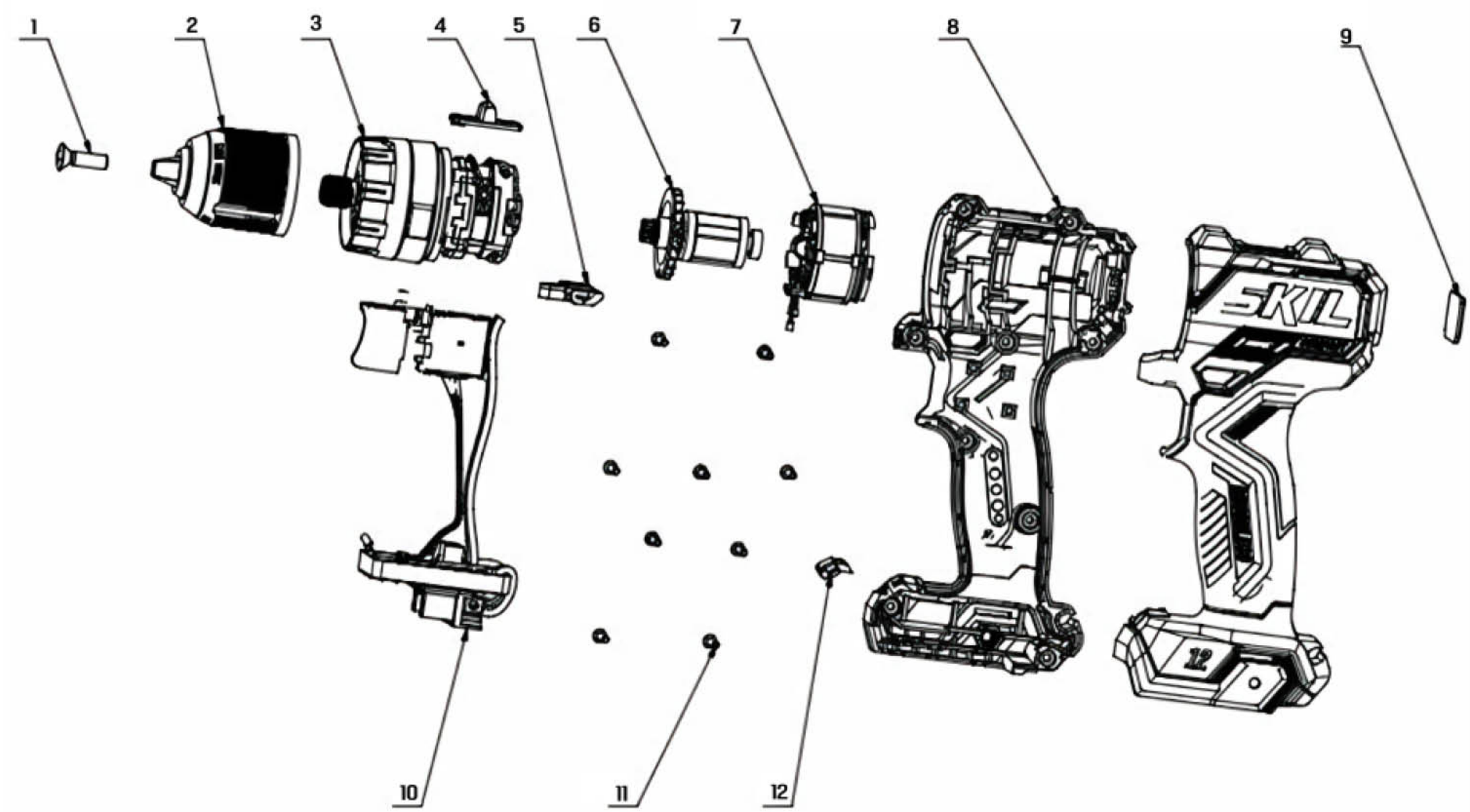
1
2
3
4
5
6
7
8
9
10
11
12
SKIL
12

부품도면 및 부품 코드 안내

구분	부품 번호	부품명
1	5620488001	Screw (L.H.)
2	3860201001	Hand Operated Drill Chuck
3	2790662002	Gear Case Assembly
4	3133087001	Speed Change Button
5	3133088001	F/R Button
6	2750420001	Rotor & Motor Gear Assembly
7	2740496003	Stator
8	2828826001	L R Housing Set
9	3133378001	Label
10	2831202001	Electric Assembly
11	5610241004	Screw
12	3129800001	LED Cover