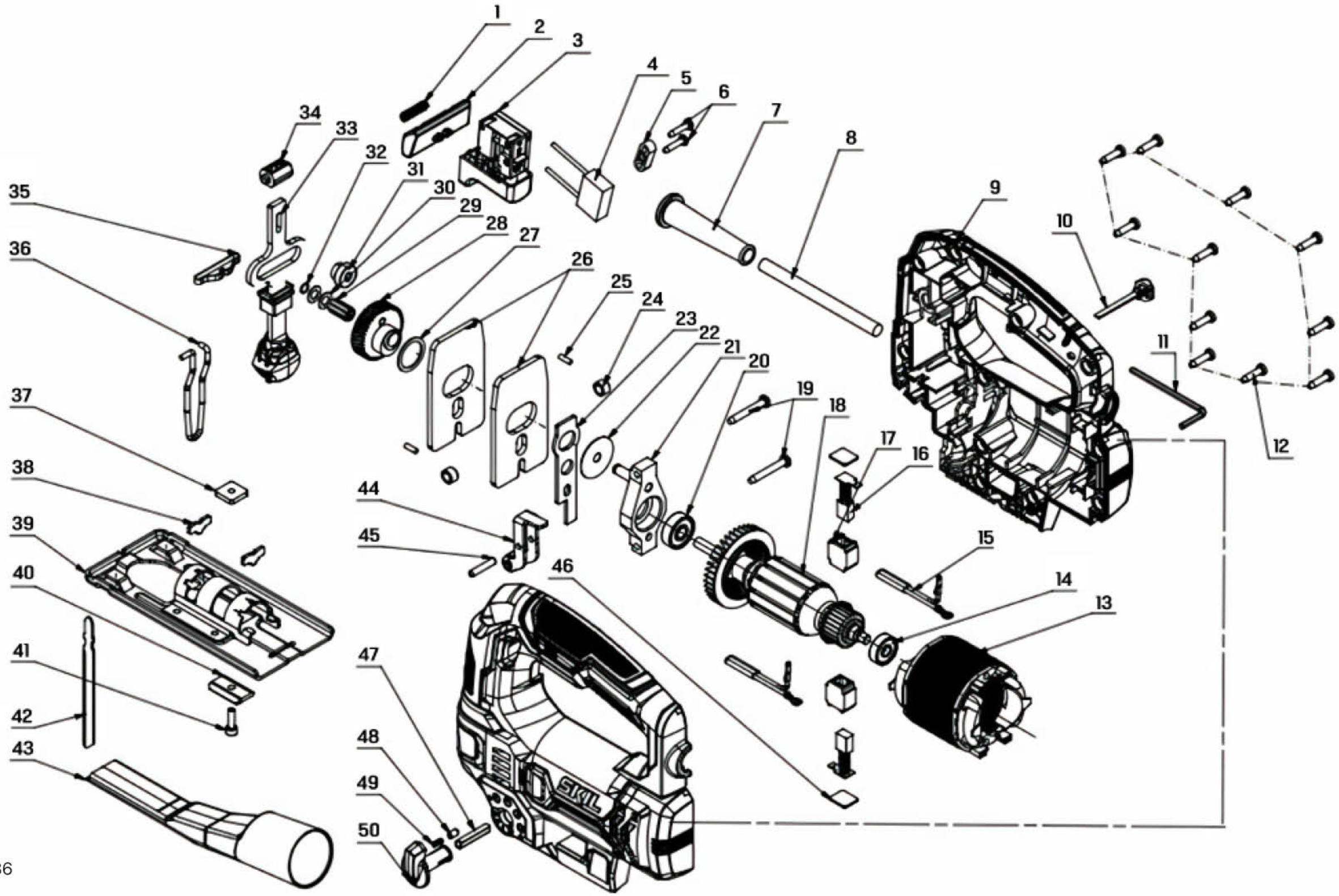
1
2
3
4
5
6
7
8
9
10
11
12
13
14
15
16
17
18
19
20
21
22
23
24
25
26
27
28
29
30
31
32
33
34
35
36
37
38
39
40
41
42
43
44
45
46
47
48
49
50
SKIL

부품도면 및 부품 코드 안내

구분	부품 번호	부품명
1	3660075001	Spring
2	3126146001	Lock Button
3	4870663001	Trigger Switch
4		Capacitor
5	3120234004	Cord Anchorage
6	5610024003	Tapping Screw
7	3121045001	Cord Guard
8	4810002282	Power Cord & Plug
9	3900054001	L,R Housing Set
10	3129603001	Blowing Knob
11	5680019004	Hexagon Wrench
12	5610290004	Tapping Screw
13	2740103028	Stator
14	5700004001	Ball Bearing
15		Inductor & Wire ASSY
16	4960005010	Carbon Brush
17	2800016002	Brush Holder
18	2751189001	Rotor
19	5610276001	Tapping Screw
20	5700005004	Ball Bearing
21	2826459001	Bearing Support ASSY
22	3700214001	Washer
23	3706752001	Pendulum Plate
24	3520510001	Oil Impreging Bearing
25	3550147002	Needle Pin
26	3700213001	Counterweight
27	3700147002	Washer
28	2820473001	Gear Set
29	5700184001	Needle Bearing
30	5650290001	Washer
31	5700322001	Bushing
32	5660006002	Ring
33	2825327002	Plunger Bar

구분	부품 번호	부품명
34	5700321001	Bearing Block
35	3705624001	Sping Piece
36	3650213001	Wire Guard
37	3700164001	Square Nut
38	3706687001	Located Block
39	2823316002	Base Plate Assy
40	5650052001	Washer
41	5620012001	Hexagon Socket Screw
42		Jigsaw Blade
43	3126446001	Vacuum Adapter
44	2821972001	Roller Support Set
45	3550177002	Guiding Roller Support Pin
46	3700491002	Flash Board
47	3520668001	Pendulum Lever Shaft
48	3700191001	Cap
49	3660050001	Spring
50	3127415002	Pendulum Lever