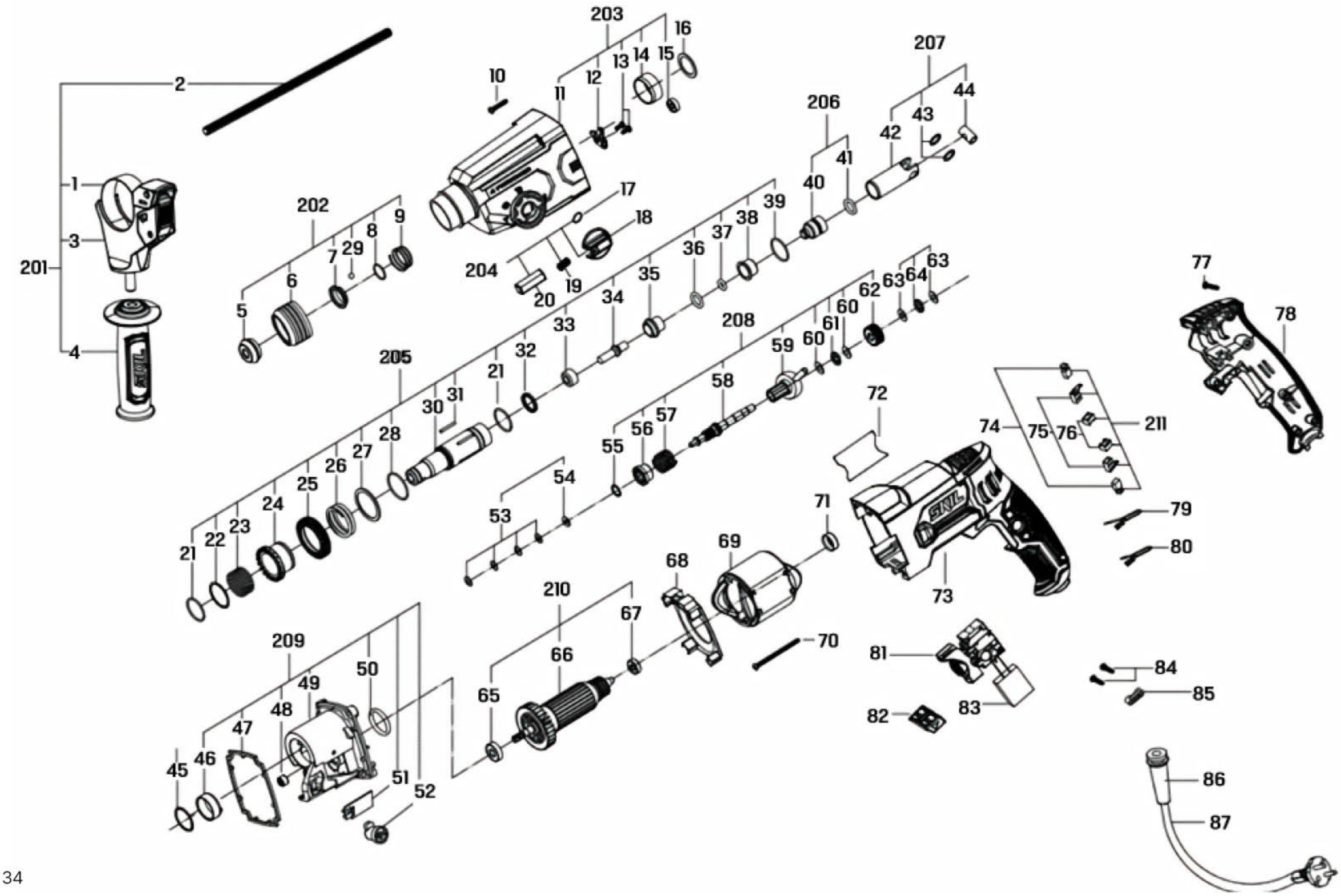
201
1
3
4
2
202
5
6
7
29
8
9
203
10
11
12
13
14
15
16
17
18
204
20
19
205
21
22
23
24
25
26
27
28
30
31
32
33
34
35
36
37
38
39
206
40
41
42
43
44
207
208
59
60
61
62
63
64
57
56
55
58
53
54
72
71
69
68
67
210
66
65
70
209
49
48
47
46
45
50
51
52
74
75
76
211
73
77
78
79
80
81
82
83
84
85
86
87

부품도면 및 부품 코드 안내

구분	부품 번호	부품명
1	8000002139	Steel Hoop
2	8000002140	Depth stop
3	8000002141	Collar
4	8000002142	Side Handle
5	8000002143	Dust Cap
6	8000002144	Plastic Sleever
7	8000002145	Spring Base
8	8000002146	Retaining Ring
9	8000002147	Spring
10	8000002148	Screws
11	8000002149	Front Housing
12	8000002150	Stopper Plate Part
13	8000002151	Screws
14	8000002152	Bearing Oil Baffle
15	8000002153	Bearing
16	8000002154	Washer
17	8000002155	O Ring
18	8000002156	Function Knob
19	8000002157	Spring
20	8000002158	Lock Knob
21	8000002159	Retaining Ring
22	8000002160	Washer
23	8000002161	Spring
24	8000002162	Bearing Sheath
25	8000002163	Sliding Gear
26	8000002164	Spring
27	8000002165	Closing Ring
28	8000002166	Closing Ring
29	8000002167	Steel Ball
30	8000002168	Spindle Bush
31	8000002169	Pins
32	8000002170	Oil Baffle Parts
33	8000002171	Limited Block

구분	부품 번호	부품명
34	8000002172	Anvil
35	8000002173	Limited Block Sleeve
36	8000002174	O Ring
37	8000002175	O Ring
38	8000002176	Fixing Sheath
39	8000002177	Retaining Ring
40	8000002178	Percussion Hammer
41	8000002179	O Ring
42	8000002180	Cylinder
43	8000002181	Washer
44	8000002182	Rod Bush
45	8000002183	Washer
46	8000002184	Bearing
47	8000002185	Seal Ring
48	8000002186	Needle Roller Bearing
49	8000002187	Fixed Base
50	8000002188	Circle Ring
51	8000002189	Slider
52	8000002190	Rotary Knob
53	8000002191	Spring
54	8000002192	Washer
55	8000002193	Closing Ring
56	8000002194	Clutch
57	8000002195	Spring
58	8000002196	Drive Shaft
59	8000002197	Wobble Bearing
61	8000002198	Thrust Needle Roller Components
62	8000002199	Small Gear
64	8000002200	Thrust Needle Roller Components
65	8000002201	Bearing
66	8000002202	Rotor
67	8000002203	Bearing
68	8000002204	Fan Baffle

구분	부품 번호	부품명
69	8000002205	Stator
70	8000002206	Screws
71	8000002207	Bearing Sleeve
73	8000002208	Rear Housing
74	8000002209	Carbon Brush ASSY
75	8000002210	Cu Brush Holder ASSY
76	8000002211	Insulated Sleeve ASSY
77	8000002212	Screws
78		Rear Handle Cover
79	8000002214	Electric Wire
80	8000002215	Electric Wire
81	8000002261	Switch Parts
82	8000002217	Change Button
83	8000002218	Capacitance
84	8000002219	Screws
85	8000002220	Cable Clip
86	8000002221	Cord Guard
87	8000002260	Power Cord & Plug
201	8000002223	Auxiliary Handle ASSY
202	8000002224	Plastic Sleever Component
203	8000002225	Front Housing ASSY
204	8000002226	Knob Component
205	8000002227	Rotating Sleeve ASSY
206	8000002228	percussion hammer ASSY
207	8000002229	Cylinder ASSY
208	8000002230	Middle Shaft ASSY
209	8000002231	Middle Cover ASSY
210	8000002232	Rotor Set
211	8000002233	Carbon Brush & Holder Component